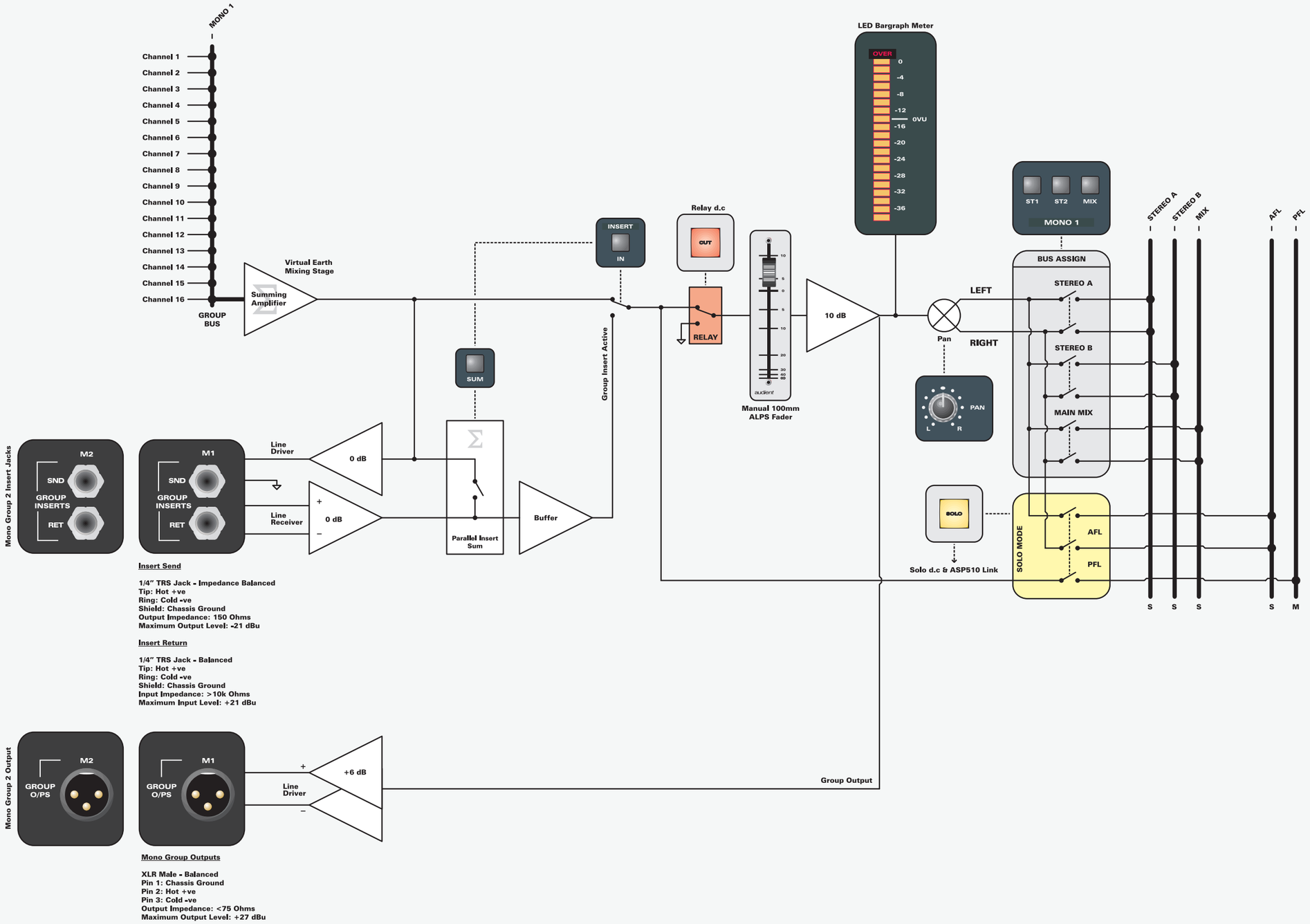

*MONO GROUP 2 NOT SHOWN - THE SAME AS MONO GROUP 1

MONO GROUPS

audient ZEN